© 2014-2022 by Amplyus LLC
All rights reserved

miniPCR™ Genes in Space Food Safety Lab: Mars Colony at Risk!

Getting started

Student's guide

Instructor's guide

© 2014-2022 by Amplyus LLC
All rights reserved

1. Synopsis

Students will help the International Space Program control an outbreak of pathogenic bacteria affecting space food in transit to Mars. They will do so by deploying essential molecular biology techniques such as PCR (polymerase chain reaction), restriction digest, and gel electrophoresis. This lab depicts real-world biotechnology applications in public health and surveillance.

- ***Techniques utilized***: PCR, restriction enzyme digest, electrophoresis
- ***Time required***: One 110-min. period or two 55-min. periods
- ***Suggested skill level***: Familiarity with DNA amplification and restriction analysis concepts, basic familiarity with micropipetting techniques

Disclaimer: no pathogenic materials used

This experimental protocol engages students in a simulated investigation of *E. coli* contamination in the food supply chain. It uses the same scientific principles and experimental techniques as real-world food safety investigations, but does not require handling of potentially harmful or pathogenic biological samples. *None of the materials provided in the Food Safety laboratory kit pose a health or food safety hazard.* At no point are pathogenic bacteria used; references to "pathogenic" and "non-pathogenic" strains or DNA samples are used only to recreate a simulated Food Safety investigation scenario.

Materials needed

Supplied in Kit (KT-1001-03)

Reagents and supplies	Amount provided in kit	Amount needed per lab group	Storage	Teacher's checklist
2X EZ PCR Master Mix, Load Ready™	700 µl	75 µl	Freezer	
Food Safety Lab Primer Mix	500 µl	50 µl	Freezer	
Food sample DNA: A (space sushi) and B (space burger)	100 µl each	10 µl each	Freezer	
Control DNA: pathogenic and non-pathogenic	100 µl each	10 µl each	Freezer	
Restriction enzyme XmnI	50 µl	4 µl	Freezer	
Fast DNA Ladder 2	150 µl	12 µl	Freezer	

Sold Separately in Learning Lab Companion Kit (KT-1510-01)

This lab requires reagents for running and visualizing DNA samples on a 2% agarose gel with a fluorescent DNA stain (e.g., SeeGreen™ or GelGreen®). The Learning Lab Companion Kit provides enough electrophoresis reagents for 8 groups when using the blueGel™ electrophoresis system. Gels can also be prepared with agarose tabs or agarose powder. Refer to https://www.minipcr.com/agarose-gel/ for detailed instructions.

Reagents and supplies	Amount provided in kit	Amount needed per lab group	Storage	Teacher's checklist
All-in-one agarose tabs	8	**One tab per agarose gel** (2% agarose gel)	Room temp., protected from light	
TBE electrophoresis buffer • 1X working solution	**Supplied as liquid concentrate or powder** Sufficient to prepare 600 ml of 1X working solution	**30 ml of 1X solution** per blueGel™ system	Room temp.	
PCR tubes (0.2 ml)	100	8		
1.7 ml plastic tubes	50	7		

Materials needed (cont.)

Supplied by teacher

Available at miniPCR.com

Reagents and supplies	Amount needed per lab group	Teacher's checklist
PCR thermal cycler: e.g. miniPCR® machine	**1** Eight reactions per group Can be shared between groups	
Horizontal gel electrophoresis apparatus: *e.g.,* blueGel™ electrophoresis system	**1** Can be shared between groups if you use two combs	
Blue light transilluminator *Note: A blue light transilluminator is integrated in the blueGel™ electrophoresis system.	**1** Can be shared between groups	
Micropipettes • 0.5-10 µl adjustable volume • 2-20 µl adjustable volume • 2-20 µl adjustable volume	 **1 per class** **1 per group** **1 for the teacher to distribute reagents**	
Disposable micropipette tips	**At least 29 per group**	
Distilled water for making agarose gels and diluting TBE buffer	**60 ml per gel**	
Flask or beaker to dissolve agarose		
Microwave or hot plate to dissolve agarose		
Heat block or water bath for restriction digest incubation (not needed if using a miniPCR® thermal cycler)		
Other supplies: • Disposable laboratory gloves • Protective eyewear • Permanent marker • Cup to dispose of tips • Food samples to test		

© 2014-2022 by Amplyus LLC
All rights reserved

3. Lab setup

Planning your time

This experiment has 5 stages:

A. PCR reaction set up
B. PCR programming and monitoring
C. Restriction digest
D. Separation of PCR products and restriction fragments by DNA electrophoresis
E. Size determination of restriction fragments and interpretation

An overview of the 110-minute experimental plan is represented below:

Preparatory activity	Experimental stage
Dispense reagents and prepare equipment • *15 min*	**A PCR set up** • 15 min
	B PCR programming & monitoring • 5 min PCR programming • 40 min PCR monitoring
STOP	*Possible stopping point (store PCR product in fridge or freezer)*
	C Restriction digest • 10 min set-up • 15 min incubation
STOP	*Possible stopping point (heat inactivate at 65°C, store in freezer)*
Pour agarose gels (e.g. during stage B) • *5 min*	**D Gel electrophoresis** • 20 min
	E Size determination & interpretation • 5 min visualization, discussion

© 2014-2022 by Amplyus LLC
All rights reserved

Quick guide: Preparatory activities

A. **PCR set up and aliquot reagents**

- Thaw tubes containing the primers and DNA samples by placing them on a rack or water bath at room temperature
- For each lab group conducting 4 PCR reactions label and dispense six tubes:
  - PCR Master Mix 75 µL
  - Primer Mix 50 µL
  - Sample A DNA 10 µL
  - Sample B DNA 10 µL
  - Control P DNA 10 µL
  - Control NP DNA 10 µL

  Each lab group will additionally need (at a minimum):
  - Micropipettes *(we recommend a 2-20µL micropipette for each lab group)*
  - Disposable micropipette tips and a small beaker or cup to dispose them
  - 8 PCR tubes (200 µL)
  - A permanent marker (fine-tipped)

PCR programming and monitoring

- Ensure each lab group's bench is set up with a miniPCR and power supply
- Ensure the miniPCR machines that are going to be monitored through the PCR reaction are connected to a computer or compatible tablet

Restriction digest

- Have a 0.5-10µL micropipette, which can be shared across lab groups
- A single pipette can be shared across lab groups, but we recommend that the instructor dispense the restriction enzyme for the students

Gel electrophoresis

- Gels can be poured in advance of the class (as described below)
- Pre-poured gels can be stored in the fridge, in a sealed container or wrapped in plastic wrap, and protected from light
- If running the gel on a different day than the PCR, completed PCR tubes can be stored in the fridge for up to one week until they are used, or in the freezer for longer-term storage

Size determination and interpretation

- Have the banding pattern of the Fast DNA Ladder 2 handy to help interpret the electrophoresis results

© 2014-2022 by Amplyus LLC
All rights reserved

4. Scenario overview

Astronauts aboard the International Space Station (ISS) have come down with severe cases of food poisoning. A doctor believes the culprit is a pathogenic (disease-causing) strain of *E. coli* bacteria that may have contaminated the food supply. But is it the space burgers or the space sushi that are harboring the dangerous bacteria? In this experiment, you will use DNA analysis tools to figure out which food source is contaminated with pathogenic *E. coli* and which is carrying its non-pathogenic (harmless) relative

Watch this video:

https://links.minipcr.com/GiS-biotech-videos

© 2014-2022 by Amplyus LLC
All rights reserved

5. Glossary

- **Agarose** – A polysaccharide that is the main component of Agar. It is used primarily to make gels for gel electrophoresis.
- **Annealing** – The 2nd Step in a PCR. Slowly cooling the material undergoing PCR in order to allow primers to bind to the correct DNA sequence.
- **Buffer** – A solution (usually of a specific pH) that resists a change in pH. Electrophoresis buffer is used in Gel Electrophoresis to carry a current through the gel and to maintain a pH at which DNA is best protected from hydrolysis (it won't break down).
- **Denaturation** – The 3rd step in a PCR. The process by which a molecule loses its natural 3-dimensional folded structure, usually due to high heat or extreme pH, this causes hydrogen bonds in the molecule to break. In this lab heat is used to denature the DNA double-helix, causing the two strands to separate from one another.
- **DNA Ladder** – A collection of DNA strands of specific known lengths that can be used to estimate the size of other DNA strands when the two are run next to each other in a gel.
- **Enterohemorrhagic** – causing hemorrhages, or ruptured blood vessels that cause rapid blood loss, within the intestines.
- **Extension** – The PCR step in which the enzyme Taq polymerase adds complimentary base pairs to the template DNA starting at the location of the primer, the results of this step are complete, double-stranded DNA molecules of which one strand is brand new.
- **Gel Electrophoresis** – The process of moving DNA (which is negatively charged) through a gel by creating an electric field that pushes them away from the negative terminal and towards the positive terminal. This allows you to see the differences in lengths of DNA fragments as shorter segments will travel farther in the gel than longer segments.
- **Incubation** – Storing something at the best environmental conditions (i.e. temperature) for the process you want it to undergo.
- **Loading Dye** – A mixture added to PCR Product before running in a gel that dyes the DNA so that it can be viewed within the gel (usually under light of a specific wavelength). Loading dye also increases the density of the PCR product to be added to the gel so that it will sink into the gel wells within the electrophoresis buffer.
- **Microcentrifuge** – A lab device that rapidly spins small tubes to concentrate liquid at the bottom of the tube or separate different materials.
- **Pathogenic** – causing disease.

© 2014-2022 by Amplyus LLC
All rights reserved

- **PCR** – Polymerase Chain Reaction, a method by which one can rapidly amplify a desired strand of DNA to billions of copies or more.
- **PCR Product** – The solution obtained after a PCR that contains the amplified DNA strands as well as any excess reactants that were added in previous steps.
- **Primer Mix** – A solution containing forward and reverse primers that bind to a complementary DNA sequence that serve as the bookends of the DNA segment you wish to amplify. This mix is added before you conduct a PCR and is essential to the process.
- **Restriction enzyme** – A protein that cuts DNA at a specific base-pair sequence (called a "restriction digest") that is used to discover differences in DNA lengths between different samples when a gel electrophoresis is conducted.
- **Template DNA** – The existing strand of DNA which primers bind to create a complementary strand and thus a second copy of that DNA segment.

Laboratory guide

Protective gloves and eyewear should be worn for the entirety of this experiment.

PCR setup

1. **Label 4 PCR tubes** (200 µl tubes)
   - Note: Label tubes on the upper side wall, as writing on the cap or lower side wall may rub off during PCR.
   - Label each tube with the name of the sample:
     - A (food sample A DNA, space sushi)
     - B (food sample B DNA, space burger)
     - P (pathogenic control DNA)
     - NP (non-pathogenic control DNA)

2. **Add PCR reagents to each PCR tube**

	Tube A	Tube B	Tube P	Tube NP
2X EZ PCR Master Mix	15 µl	15 µl	15 µl	15 µl
Primer Mix	10 µl	10 µl	10 µl	10 µl
DNA Sample	Food sample A 5 µl	Food sample B 5 µl	Pathogenic control 5 µl	Non-pathogenic control 5 µl
TOTAL VOLUME	30 µl	30 µl	30 µl	30 µl

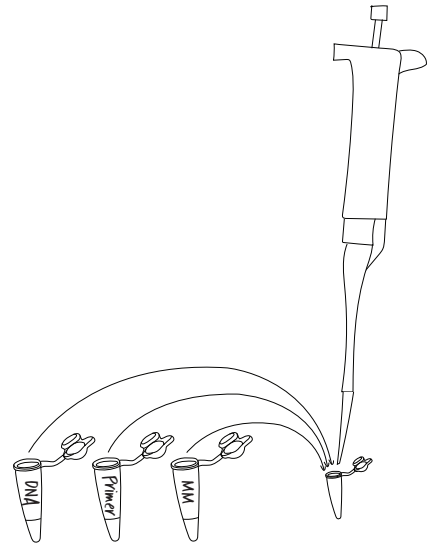

Use a micropipette to add each of the reagents. Remember to change tips at each step!

Note: EZ PCR Master Mix™ contains:
- Taq DNA polymerase • dNTPs
- PCR buffer with Mg^{2+} • Gel loading dye

3. **Cap the tubes and ensure the reagents mix well**
   - You may flick each tube with your fingers to ensure proper mixing.
   - Gently tap tubes on your bench to collect liquid at the bottom.

Flick to mix

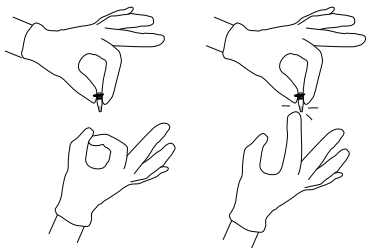

4. **Place the tubes inside the miniPCR® machine**
   - Press firmly on the tube caps to ensure a tight fit.
   - Close the PCR machine lid and tighten it gently.

Tap to collect liquid at bottom

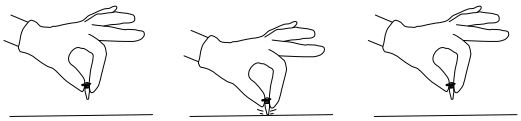

PCR programming

These instructions are illustrated using miniPCR® software on a Windows PC. Software interfaces vary slightly by operating system. See the miniPCR® User's Guide for more details.

If using a different thermal cycler, PCR protocol parameters should remain the same (step 7).

1. **Open the miniPCR® app and remain on the "Library" window**

2. **Connect your miniPCR® thermal cycler to your device using the supplied USB cable or via Bluetooth®**
   - Note: Bluetooth® is only available on certain models. To connect via Bluetooth®, select the (m) icon, located by "Devices" at the left of the desktop app or at the top of the mobile app.

3. **Make sure your miniPCR® thermal cycler is plugged in and that the power switch is turned on**
   - Note: If your machine begins running a previously loaded protocol, you may stop it by clicking or tapping the "X" symbol in the top left box of the "Monitor" window.

4. **While in the "Library" window, click the ⊕ button to create a new protocol**
   - Button is located in the upper right hand corner of the window.

5. **Select "PCR" from the drop-down menu**

6. **Enter a name for the protocol; for example: "GMO Lab"**

7. **Enter the PCR protocol parameters:**
   - Initial denaturation 94°C, 30 sec
   - Denaturation 94°C, 5 sec
   - Annealing 57°C, 5 sec
   - Extension 72°C, 5 sec
   - Number of cycles 30
   - Final extension 72°C, 30 sec

   Note: The "Heated lid" slider should be in the on position.

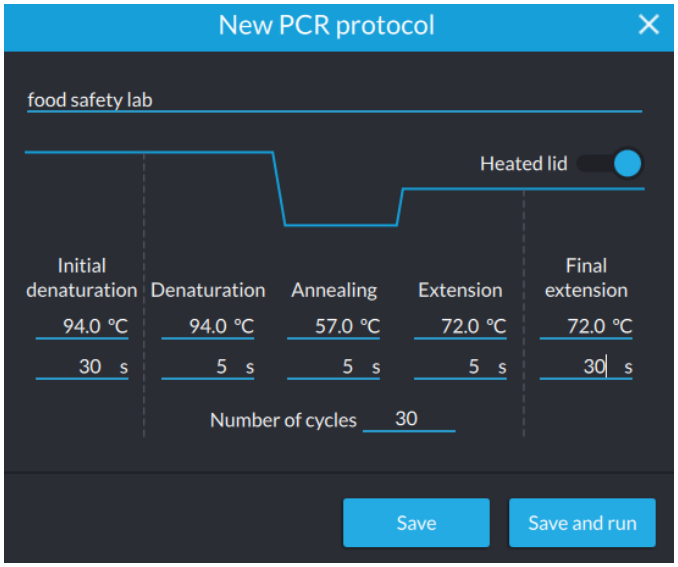

8. **Click "Save and run" to start the protocol**
   - If connected to more than one machine, choose the serial number of the miniPCR® thermal cycler you are using. If asked "Do you want to stop the current protocol…?", click "Yes".
   - The lights on the front of the miniPCR® thermal cycler will blink 3 times to indicate that the protocol has been loaded.
   - Note: If needed, you may unplug the USB cable or disconnect Bluetooth® once the protocol has been loaded. Even if disconnected from your device, the protocol will continue to completion as normal.

9. **Choose "Monitor" window**
   - The "Monitor" window can be selected on the left column in the desktop app and at the top in mobile app.
   - If more than one miniPCR® thermal cycler is connected to the same device, choose which machine you would like to monitor using the tabs at the top of the window (desktop app) or bottom of the Library (mobile app).

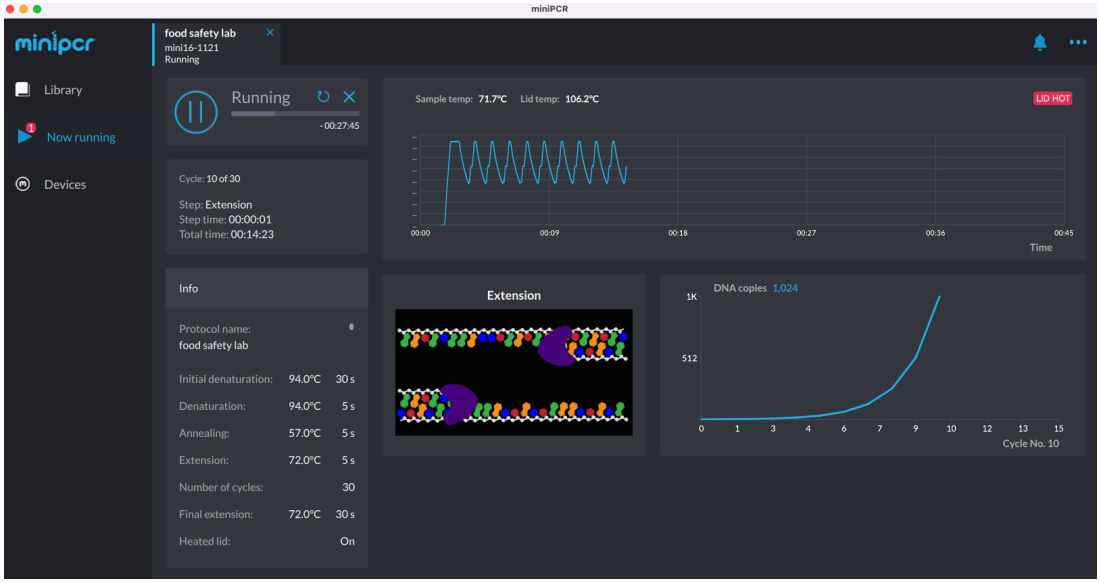

The miniPCR® software allows each lab group to monitor the reaction parameters in real time.

.

10. **When the PCR run has completed (approximately 30 min), app status will show "Finished" and the red, yellow, and green LEDs on your miniPCR® thermal cycler will light up and stay on**

Be careful not to touch the metal lid which may still be hot.

11. **PCR product is stable at room temperature for several days. For longer term storage, move tubes to a fridge or freezer**
    - Tubes may remain inside the miniPCR® thermal cycler for several days following protocol completion.

Set up restriction digest

1. **Label four new PCR tubes (200 µl tube)**
   - Note: Label tubes on the upper sidewall, as writing on the cap or lower sidewall may rub off.
   - Label the tubes:
     - "AX": This will contain the PCR product from food sample A as well as the restriction enzyme
     - "BX": This will contain the PCR product from food sample B as well as the restriction enzyme
     - "PX": This will contain the PCR product from the pathogenic control as well as the restriction enzyme
     - "NPX": This will contain the PCR product from the non-pathogenic control as well as the restriction enzyme

2. **Transfer 15 µl of the appropriate PCR reaction to each tube**
   - Note: Do not discard your leftover PCR product. You will use this in the next step (gel electrophoresis).

3. **Use a 0.5-10 µl micropipette to add 1 µl restriction enzyme to each tube**
   - Eject the restriction enzyme directly into the liquid already in your tube and pipette up and down several times to mix. Proper mixing is essential.
   - Note: Your teacher might perform this step for you.

	Tube AX	Tube BX	Tube PX	Tube NPX
PCR product	Food sample A 15 µl	Food sample B 15 µl	Pathogenic control 15 µl	Non-pathogenic control 15 µl
Restriction enzyme	1 µl	1 µl	1 µl	1 µl
TOTAL VOLUME	16 µl	16 µl	16 µl	16 µl

4. **Cap the tube then flick to ensure the reagents are well mixed**

5. **Gently tap the tubes on your bench to ensure that the liquid volume collects at the bottom**

6. **Incubate at 37°C for 15 minutes**
    - You can use a miniPCR® thermocycler in Heat Block mode, or a water bath or dry block incubator.

Flick to mix

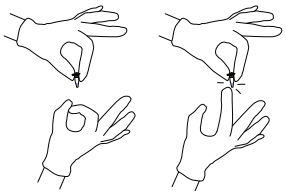

Tap to collect liquid at bottom

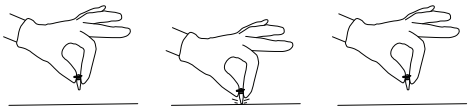

Optional stopping point

If the restriction digest will not be used immediately for gel electrophoresis:

- Incubate at 65°C for 20 minutes.
- You can use a miniPCR® thermocycler in Heat Block mode, or a water bath or dry block incubator.
- Store samples in the freezer for up to one week.

Gel electrophoresis - Pouring gels (before or during class period)

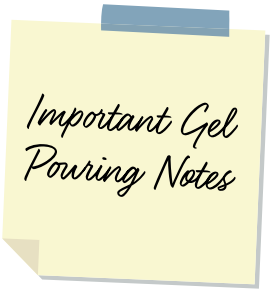

Gels can be prepared up to three days ahead of time and stored at ambient temperature, covered in air-tight plastic wrap and protected from light.

You will need eight lanes plus one lane for ladder per group. Groups can share gels if you use two combs.

These instructions are designed for use with the blueGel™ electrophoresis system by miniPCR bio™. If using another electrophoresis system, these instructions may need to be adjusted according to the manufacturer's instructions.

! Protective gloves and eyewear should be worn for the entirety of this experiment.

1. **Prepare 1X TBE buffer (to be completed by teacher in advance)**
   - TBE buffer is often provided as liquid concentrate or powder.
   - Follow manufacturer's instructions to prepare 1X TBE buffer solution.

2. **Prepare a clean and dry casting platform with a gel tray and comb**
   - Place the clear gel tray in the white casting platform.
   - Place a well-forming comb at the top of the gel tray.

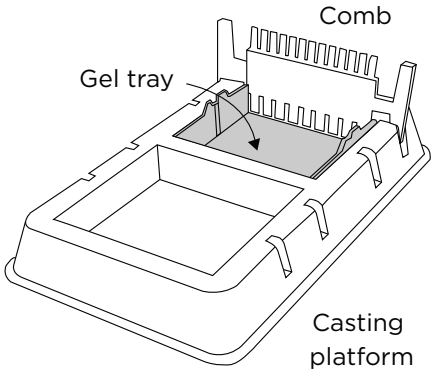

3. **Prepare a 2% agarose solution with a fluorescent DNA stain (e.g., SeeGreen™ or GelGreen®) using the method indicated by your instructor**

IMPORTANT NOTE: There are several ways to prepare agarose gels

- Scan the QR code for detailed instructions on how to prepare agarose gels.
- Both written and video instructions are available.

www.minipcr.com/agarose-gel/

4. **Pour the agarose solution into the prepared casting platform with a gel tray and comb**
    - The agarose solution should cover the bottom of the gel tray and the bottom 3 mm of the comb (roughly the bottom 1/3 of the comb).

5. **Allow gel to solidify completely and remove the comb by pulling firmly upwards**
    - Gels will typically be ready in about 10 minutes.
    - Gel is ready when cool and firm to the touch.

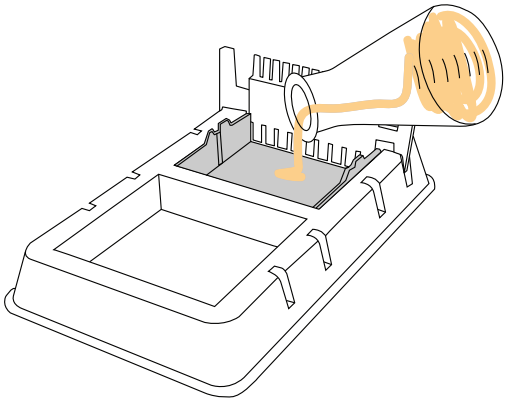

Protective gloves and eyewear should be worn for the entirety of this experiment.

Gel electrophoresis - Running the gel

These instructions are designed for use with blueGel™ electrophoresis system by miniPCR bio™. If using another electrophoresis system, these instructions may need to be adjusted according to the manufacturer's instructions.

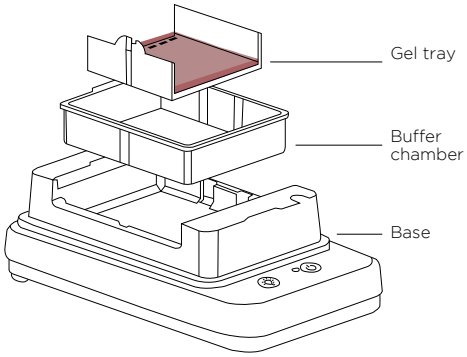

1. **Place the gel tray containing your gel in the buffer chamber**
   - Ensure that the clear buffer chamber is inside the blueGel™ electrophoresis system.
   - The wells of the gel should be on the same side as the negative electrode, away from the power button.

2. **Add 30 ml of 1X TBE electrophoresis buffer**
   - The buffer should just cover the gel and fill the wells.
   - Ensure that there are no air bubbles in the wells (shake the gel gently if bubbles need to be dislodged).

3. **Load samples onto the gel in the following sequence**
   - **Lane 1:** 10 µl DNA Ladder
   - **Lane 2:** 12 µl Tube A (PCR product for food sample A, space sushi)
   - **Lane 3:** 12 µl Tube B (PCR product for food sample B, space burger)
   - **Lane 4:** 12 µl Tube P (PCR product for pathogenic control)
   - **Lane 5:** 12 µl Tube NP (PCR product for non-pathogenic control)
   - **Lane 6:** 12 µl Tube AX (restriction digest for food sample A, space sushi)
   - **Lane 7:** 12 µl Tube BX (restriction digest for food sample B, space burger)
   - **Lane 8:** 12 µl Tube PX (restriction digest for pathogenic control)
   - **Lane 9:** 12 µl Tube NPX (restriction digest for non-pathogenic control)

   Note: Change pipette tips between samples to prevent contamination.

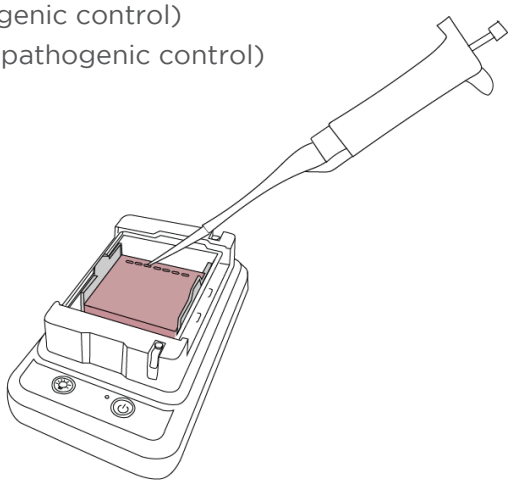

4. **Place the orange cover on the blueGel™ electrophoresis system**
   - To prevent fogging, make sure that ClearView™ spray has been evenly applied to the inside of the orange cover.
   - Match the positive and negative electrode signs on the orange lid with the corresponding positive and negative signs on the blue base.
   - The electrodes of the lid should be aligned with the metal leads on the base.
   - The orange lid should sit flush with the blue base using little force.

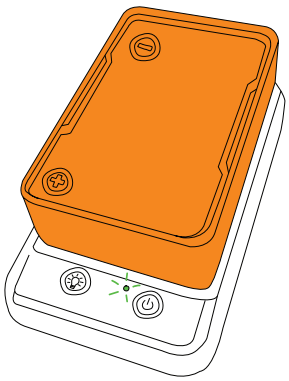

5. **Press the "Run" button**
   - Check that the green light beside the power button remains illuminated.

6. **Conduct electrophoresis for 15-25 minutes**
   - Note: Check the gel every 10 minutes to monitor sample migration.
   - Longer electrophoresis times will result in better size resolution. However, if run too long, small DNA fragments can run off the end of the gel or lose fluorescence.

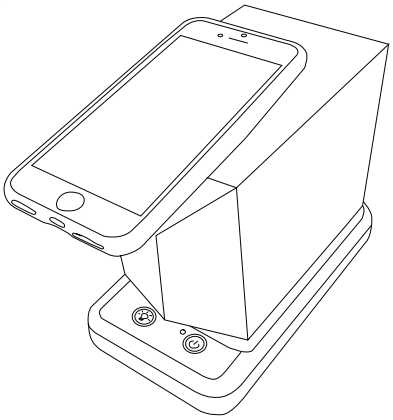

Gel electrophoresis - Visualizing results

1. **Press the "light bulb" button to turn on the blueGel™ transilluminator**
   - For best viewing, dim lights or use Fold-a-View™ photo documentation hood with a smartphone camera.
   - Gels may be viewed at the end of the run or periodically throughout the run.
   - If the image appears hazy, wipe off the inside of the orange cover and reapply ClearView™ spray.

2. **Ensure that there is sufficient band separation in the 150-500 bp range**
   - Run the gel longer if needed to increase resolutionPlace

3. **Document your results**
   - Place Fold-a-View™ photo documentation hood on the blueGel™ electrophoresis system to take a picture with a smartphone or other digital camera.
   - Compare the bands from the DNA samples to the ladder to obtain size estimates.

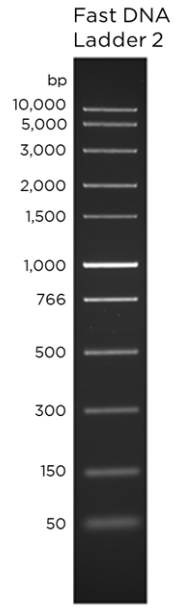

© 2014-2022 by Amplyus LLC
All rights reserved

7. Study questions

Questions before experimental set-up

1. What is a foodborne disease outbreak, and why do they occur?

2. How are outbreaks of foodborne disease detected?

3. What is the *E. coli* O157:H7 strain? What human disease can it be responsible for?

4. What type of protein does the *E. coli* H antigen gene encode? How can this gene be useful in food safety biotechnology?

© 2014-2022 by Amplyus LLC
All rights reserved

5. Why do we need to use PCR to detect a bacterial contamination in the food supply?

6. Following PCR amplification of the gene encoding the flagellar H antigen, how can we determine whether it is of the pathogenic or non-pathogenic kind?

© 2014-2022 by Amplyus LLC
All rights reserved

Questions after gel electrophoresis and visualization

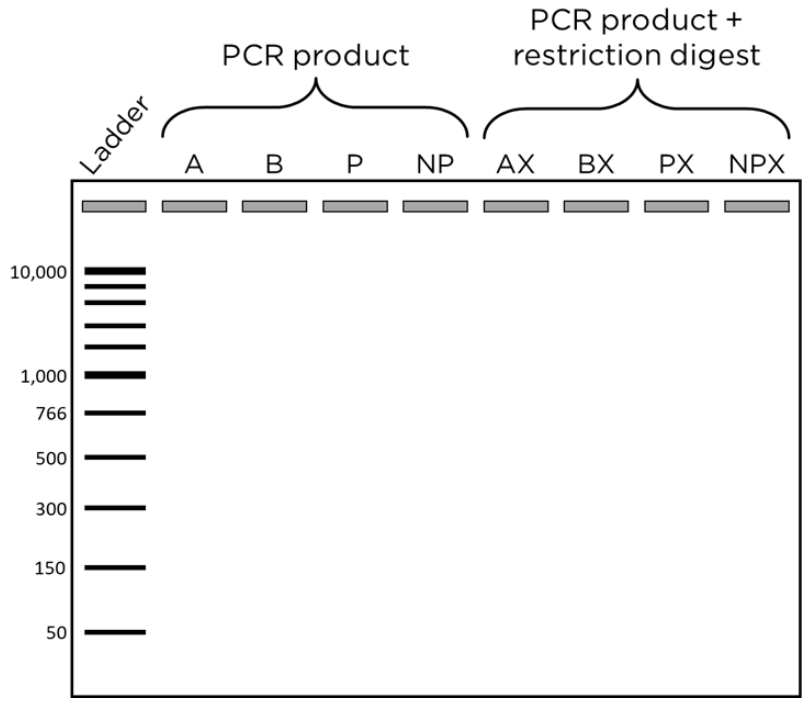

1. Sketch your experimental results on the image to the right.

2. What conclusions can you draw from lanes 2-5 (the PCR products)?

3. What conclusions can you draw from lanes 6-9 (the restriction digested PCR products)?

4. Based on your results, which food is contaminated? Explain how you can tell.

Discussion questions

1. How can biotechnology help prevent outbreaks of foodborne illness?

2. How can biotechnology help after an outbreak of foodborne illness is detected?

© 2014-2022 by Amplyus LLC
All rights reserved

8. Expected results

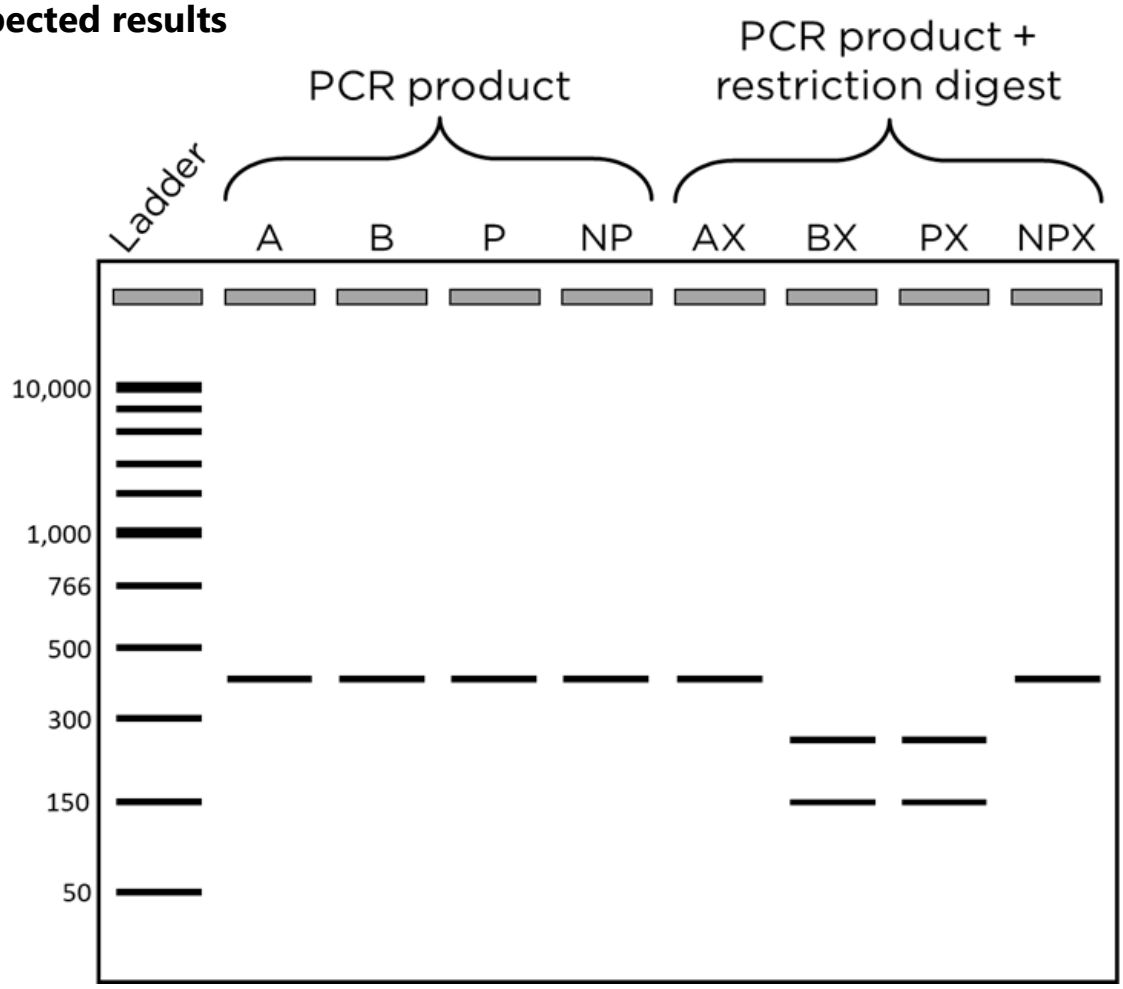

Lanes 2-5: The presence of the ~400 bp band indicated that the PCR successfully amplified the *E. coli* gene encoding the flagellar H antigen

- The presence of this band tells us that both food A (space sushi) and food B (space burgers) had *E. coli* present, but it does not tell us whether the *E. coli* were pathogenic

Lanes 6-9: The restriction enzyme only cuts the pathogenic version of the gene.

- The PCR product from the space sushi (AX) was <u>not</u> cut by the restriction enzyme and matches the non-pathogenic control DNA. This tells us that the space sushi was <u>not</u> the source of the outbreak.
- The PCR product from the space burgers (BX) <u>was</u> cut by the restriction enzyme and matches the pathogenic control DNA. This tells us that the space burger was the source of the outbreak.

© 2014-2022 by Amplyus LLC
All rights reserved

9. Student-centered investigations and extension activities

Student-Centered Investigations

1) Divide class into 2 sets of lab groups with 2 PCR tubes each

"Field inspectors" groups (2 PCR tubes each)

- 1 tube labeled "A": DNA sample from Food Sample A
- 1 tube labeled "B": DNA sample from Food Sample B

"NASA CONTROL Labs" groups (2 PCR tubes)

- 1 tube labeled "P": Control DNA P from a pathogenic strain
- 1 tube labeled "NP": Control DNA P from a non-pathogenic strain

Note: Use half the volumes specified in section 6 for each group

2) Analyze mixed-genotype samples

Set up an unknown sample consisting of mixed "A" and "B" DNA

- Result will be a mixed "pathogenic" and "non-pathogenic" sample
- Likely scenario in nature, as most samples contain multiple bacteria

Student writing exercise – write a persuasive article about the use of biotechnology tools in public health and surveillance, and its applications in the food industry.

- Cite examples of real-world food poisoning outbreaks
- Investigate role of USDA in pathogen surveillance

Further resources:

- Outbreak Detection Since Jack in the Box: A Public Health Evolution
- CDC PulseNet Home
- www.genesinspace.org

© 2014-2022 by Amplyus LLC
All rights reserved

10. Learning goals and skills developed

Student Learning Goals:

- Understand the basic structure of DNA and its role in genetic inheritance
- Understand that PCR is a technique for amplifying specific parts of the genome
- Distinguish between pathogenic vs non-pathogenic bacterial strains
- Learn the role of certain *E. coli* strains in enterohemorrhagic diarrhea outbreaks
- Learn about bacterial diversity and use of genetic markers in serotype detection
- Discuss the use of DNA analysis in food safety and in public health surveillance

Scientific Inquiry Skills:

- Students will create hypotheses and predict results
- Students will compare their results to their predictions
- Students will generate tables to present their results
- Students will use experimental results to make conclusions based on hypotheses
- Students will follow laboratory safety protocols

Molecular Biology Skills:

- Principles and practice of PCR
- Preparation of agarose gels
- Agarose gel DNA electrophoresis
- Staining, visualization, and molecular weight analysis of DNA fragments
- Restriction digest of DNA fragments
- Analysis of restriction fragment length polymorphisms (RFLP)

© 2014-2022 by Amplyus LLC
All rights reserved

11. Standards alignment

Next Generation Science Standards - Students will be able to…

HS-LS1-1 Construct an explanation based on evidence for how the structure of DNA determines the structure of proteins which carry out the essential functions of life through systems of specialized cells.

HS-LS2-7 Design, evaluate, and refine a solution for reducing the impacts of human activities on the environment and biodiversity.

HS-LS3-1 Ask questions to clarify relationships about the role of DNA and chromosomes in coding the instructions for characteristic traits passed from parents to offspring.

HS-LS3-2 Make and defend a claim based on evidence that inheritable genetic variations may result from: (1) new genetic combinations through meiosis, (2) viable errors occurring during replication, and/or (3) mutations caused by environmental factors.

HS-LS4-1 Communicate scientific information that common ancestry and biological evolution are supported by multiple lines of empirical evidence.

HS-LS4-4 Construct an explanation based on evidence for how natural selection leads to adaptation of populations.

Common Core English Language Arts Standards - Students will be able to…

WHST.9-12.2 Write informative/explanatory texts, including the narration of historical events, scientific procedures/ experiments, or technical processes.

WHST.9-12.9 Draw evidence from informational texts to support analysis, reflection, and research.

SL.11-12.5 Make strategic use of digital media (e.g., textual, graphical, audio, visual, and interactive elements) in presentations to enhance understanding of findings, reasoning, and evidence and to add interest.

Ordering information

To order miniPCR® Food Safety Lab kits, you can:

Call (781)-990-8PCR

email us at orders@minipcr.com

visit https://www.minipcr.com

miniPCR® Food Safety Lab (catalog no. KT-1011-03) contains the following reagents:

- 2X EZ PCR Master Mix, Load Ready™
- Food Safety Lab Primer Mix
- Food sample DNA: Sample A (space sushi) and Sample B (space burger)
- Control DNA: pathogenic and non-pathogenic
- Restriction enzyme XmnI
- Fast DNA Ladder 2, Load Ready™

Materials are sufficient for 8 lab groups

All components should be kept frozen at -20°C for long-term storage

Reagents must be used within 12 months of shipment

Other reagents needed

- Agarose (electrophoresis grade)
- Fluorescent DNA stain (e.g., SeeGreen™ or GelGreen®)
- Gel electrophoresis buffer (e.g., 1X TBE)
- Distilled or deionized water (to dilute TBE buffer concentrate)

Note: Agarose, DNA stain, and TBE buffer are available at minipcr.com as part of the Learning Lab Companion Kit (KT-1510-01)

© 2014-2022 by Amplyus LLC
All rights reserved

13. About miniPCR™ Learning Labs

This Learning Lab was developed jointly by **MassBioEd** and **miniPCR™** in an effort to help more students understand concepts in molecular biology and to gain hands-on experience in real biology and biotechnology experimentation.

We believe, based on our direct involvement working in educational settings, that it is possible for these experiences to have a real impact in students' lives. Our goal is to increase everyone's love of DNA science, scientific inquiry, and STEM.

We develop Learning Labs to help achieve these goals, working closely with educators, students, academic researchers, and others committed to science education.
The guiding premise for this lab protocol is that a ~2-hour PCR-based lab plan developed around a real-life biotechnology application (in this case, a simulated investigation of a foodborne disease outbreak) provides the right balance between intellectual engagement, experimentation, inquiry, and discussion. The design of this lab has simplified certain elements to achieve these goals, but it is based on real-world science applications: the detection of pathogenic *E. coli* using PCR and restriction fragment length polymorphism analysis of different bacterial serotypes[1]. We use plasmid DNA instead of bacterial genomic DNA as the PCR template in order to increase the protocol's experimental robustness. We use a single-site cutter rather than a complex restriction banding pattern to simplify interpretation and discussion of the results. Similar designs have been incredibly effective for other very successful educational lab courses, to which we owe inspiration[2].

Starting on a modest scale working with Massachusetts schools, miniPCR™ Learning Labs have been received well, and their use is growing rapidly through academic and outreach collaborations.

Authors: Ezequiel Alvarez Saavedra, Ph.D., and Sebastian Kraves, Ph.D.

---

[1] See, for example: Wang L. *et al*., Sequence diversity of the *Escherichia coli* H7 fliC genes: implication for a DNA-based typing scheme for *E. coli* O157:H7. J Clin Microbiol. 2000 May;38(5):1786-90. PubMed PMID: 10790100; Machado J, *et al*., Identification of Escherichia coli flagellar types by restriction of the amplified fliC gene. Res Microbiol. 2000 Sep;151(7):535-46. PubMed PMID: 11037131.
[2] See, for example: Bouakaze C, *et al*. "OpenLAB": A 2-hour PCR-based practical for high school students. Biochem Mol Biol Educ. 2010 Sep;38(5):296-302. doi: 10.1002/bmb.20408. PubMed PMID: 21567848.